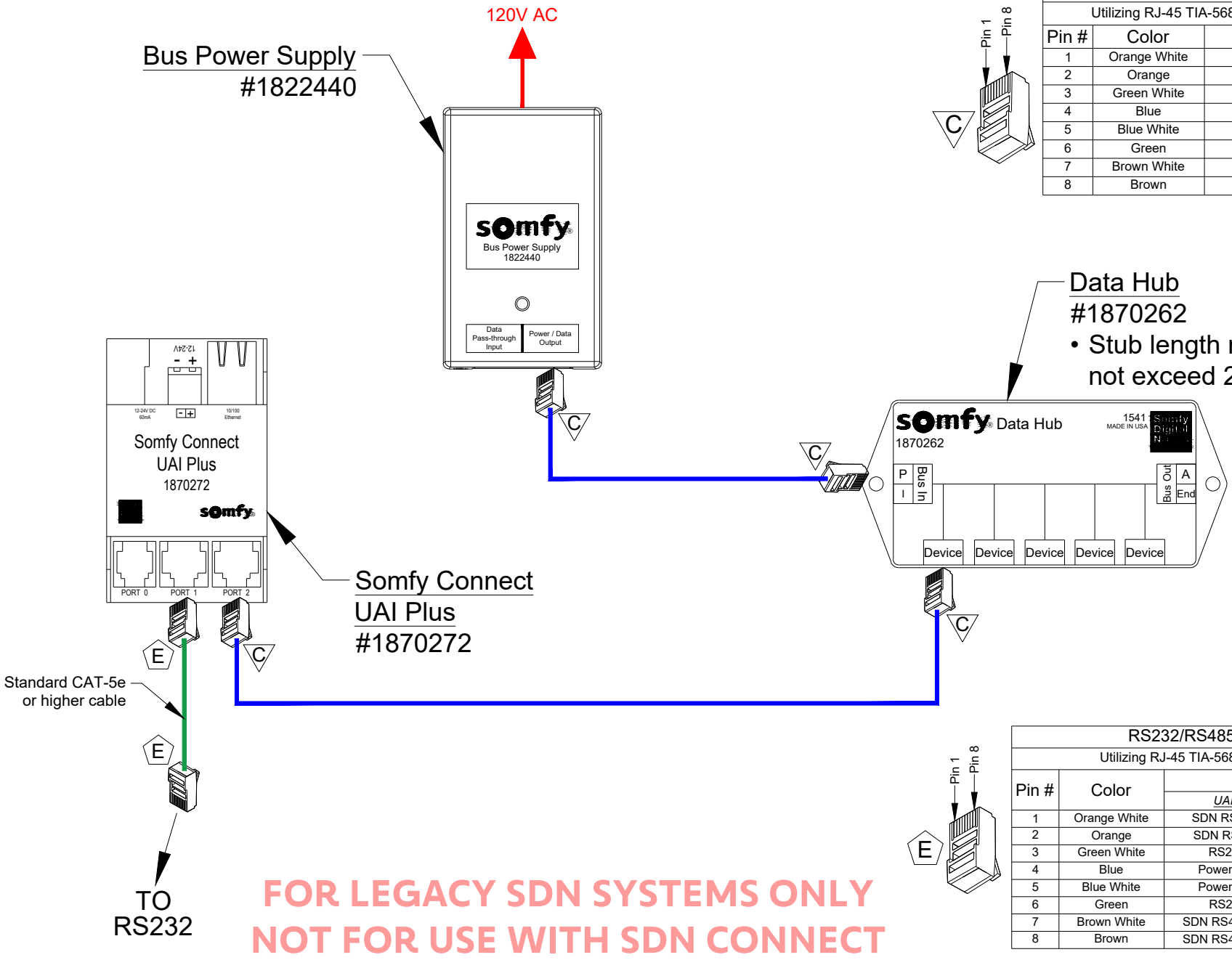

SDN Wiring Pinout		
Utilizing RJ-45 TIA-568B termination standard		
Pin #	Color	Function
1	Orange White	SDN RS485 (+)
2	Orange	SDN RS485 (-)
3	Green White	Reserved
4	Blue	Power 24v DC
5	Blue White	Power 24v DC
6	Green	Reserved
7	Brown White	SDN RS485 Ground
8	Brown	SDN RS485 Ground

RS232/RS485 Wiring Pinout			
Utilizing RJ-45 TIA-568B termination standard			
Pin #	Color	Function	
		UAI Plus	*Third-Party*
1	Orange White	SDN RS485 (+)	-
2	Orange	SDN RS485 (-)	-
3	Green White	RS232 RX	RS232 TX
4	Blue	Power 24v DC	-
5	Blue White	Power 24v DC	-
6	Green	RS232 TX	RS232 RX
7	Brown White	SDN RS485 Ground	Ground
8	Brown	SDN RS485 Ground	-

FOR LEGACY SDN SYSTEMS ONLY
NOT FOR USE WITH SDN CONNECT

© 2015 Somfy Systems, Inc. All Rights Reserved. This drawing is the property of Somfy Systems, Inc.. The graphics, information and specific ideas in this document are the exclusive property of Somfy Systems, Inc. and must not be made public, copied, or sold. Others seeking permission to reproduce this document, in whole or in part, must obtain permission from Somfy Systems, Inc. in writing.

Tel: 1-800-64-SOMFY
Fax: 1-609-495-8165
www.somfysystems.com

Date:	09/18/19
Print Size:	8.5" x 11"
Scale:	NTS
Sales:	N/A
Drawn by:	RV
Checked by:	PK

Revisions			
Rev	Date	By	Description
-	--/--/--	-	
-	--/--/--	-	
-	--/--/--	-	
-	--/--/--	-	
-	--/--/--	-	

Dwg Title: UAI Plus RS232 Integration Wire Detail

Dwg No.: UAI-WIRING-01

Project name: Technical Library

Client: Somfy Systems, Inc.

Address: 121 Herrod Boulevard, Dayton, NJ 08810